Narragansett Bay Commission

Sewer Alteration Permit Applications

For

Road Construction/ Other Projects

Please Type or Print & Check (3) Appropriate Boxes

PERMIT NUMBER: _____

FINAL

☐ **APPROVED**

☐ **REJECTED**

☐ **INACTIVE**

INTERNAL USE ONLY

1. **Applicant:**

Name: _____

Company Name: (if applicable) _____

Address: _____

_____

City/Town: _____ State: _____ Zip: _____

Telephone: (Home) _____ (Bus.) _____ (Fax) _____

2. **To Whom Should Notification Be Sent (if other than applicant)**

Name: _____

Company Name: (if applicable) _____

Address: _____

_____

City/Town: _____ State: _____ Zip: _____

Telephone: (Home) _____ (Bus.) _____ (Fax) _____

3. **Project Description:**

In which city or town will the Proposed alteration occur? _____

Provide a brief description of work to be done and area to be affected.
If a road is to be repaved or reconstructed, include the boundaries/street numbers to be affected.

_____

_____

_____

_____

Narragansett Bay Commission

Sewer Alteration Permit Applications

For

Road Construction/ Other Projects

Please Type or Print & Check (3) Appropriate Boxes

Provide a sketch or a map showing the area to be affected (include street names, manholes(s), buildings, and any other significant structures.
The sketch or map should indicate at least two (2) points of reference with distance measurements corresponding to each structure or connection to be altered.

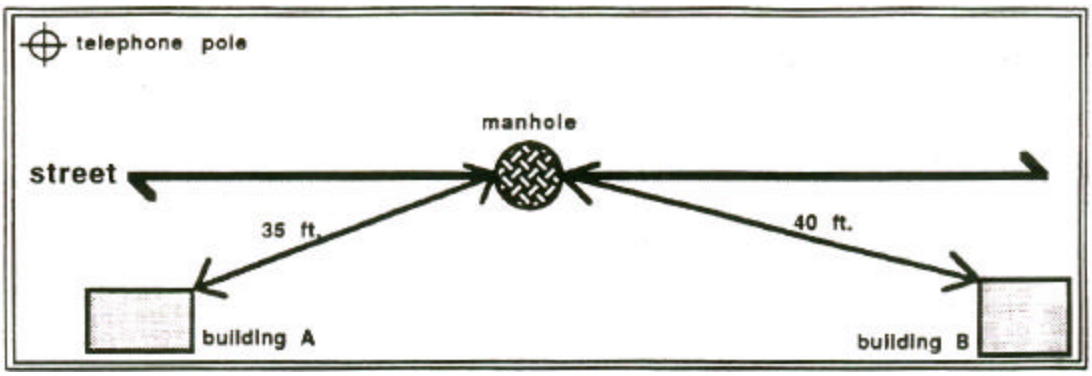

4. **Number Of Structures To Be Altered:**

_____ Manholes(s)

_____ Catch Basins(s)

_____ Service Connection(s)

_____ Other Structure(s) _____

All structures must be uncovered and visible when the roadway/ site work is completed at the end of each work day.

5. **Debris Removal:**

Briefly describe the proposed method to prevent debris from entering the sewer system. (Appendix 1 shows a suggested design for a debris platform.)

_____

_____

_____

Narragansett Bay Commission

Sewer Alteration Permit Applications

For

Road Construction/ Other Projects

Please Type or Print & Check (3) Appropriate Boxes

6. Construction:

What are the approximate starting and finishing dates of construction? _____ _____

Starting Date: Finishing Date:

Please provide information about the Contractor.

Name: _____ License Number: _____

Company: _____

Address: _____ City/Town: _____ State: _____ Zip: _____

Telephone: (Bus.) _____ (Fax) _____

Please provide information about the Contractor's Bonding Company.

Company: _____

Address: _____ City/Town: _____ State: _____ Zip: _____

Amount of Bond: _____ Telephone (Bus.) _____ (FAX) _____

If this Sewer Connection Alteration Application is approved, the undersigned applicant agrees to accept and abide by all provisions of the Narragansett Bay Commission's Rules and Regulations for the Use of Wastewater Facilities within the Narragansett Bay Commission, as amended, and shall in every respect conform to the terms of this application. The applicant shall provide a safe working environment during the construction period. The Applicant must report any changes to the information to this Sewer Alteration Permit to the Narragansett Bay Commission.

_____

Signature of Property Owner Date

Narragansett Bay Commission

Sewer Alteration Permit Applications

For

Road Construction/ Other Projects

Please Type or Print & Check (3) Appropriate Boxes

DEBRIS PLATFORM EXAMPLE APPENDIX 1

A debris platform must be installed in all NBC manholes. The contractor shall not remove the manhole frame or cover without the issuance of a Sewer Alteration Permit from the NBC.

SIDE VIEW:

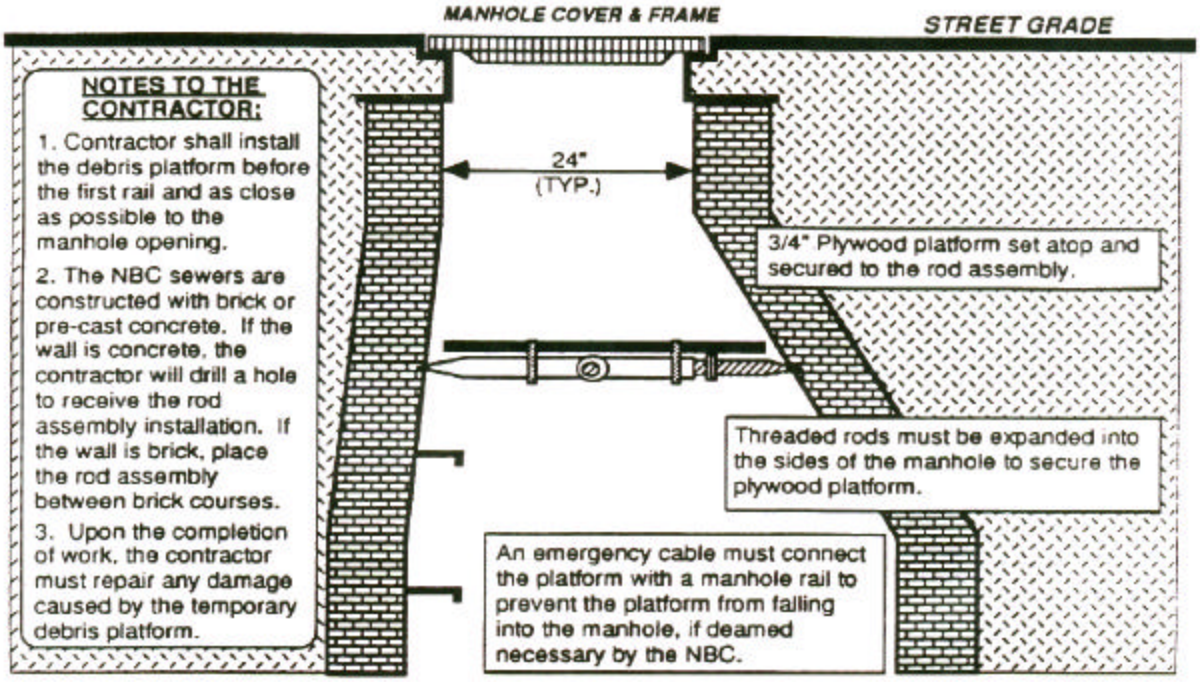

ROD ASSEMBLY DIAGRAM (LUG WRENCH RESEMBLANCE)
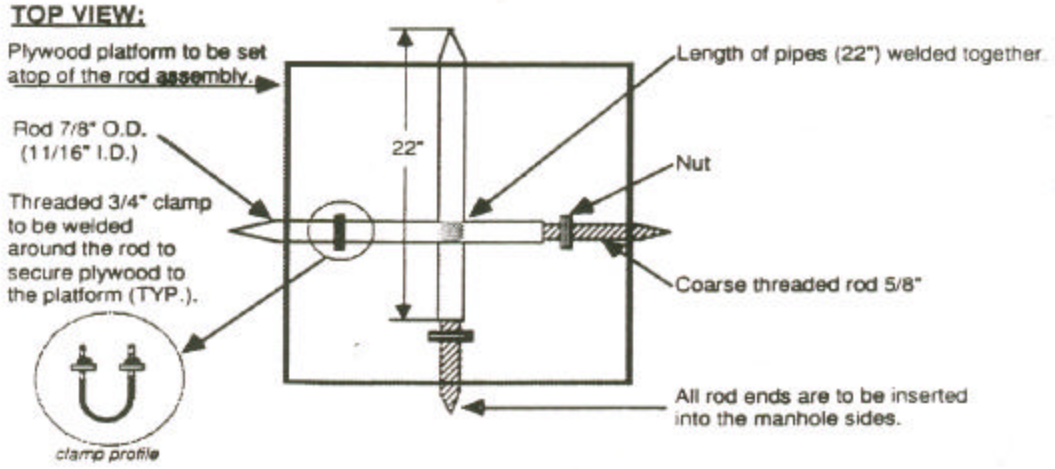
TOP VIEW: